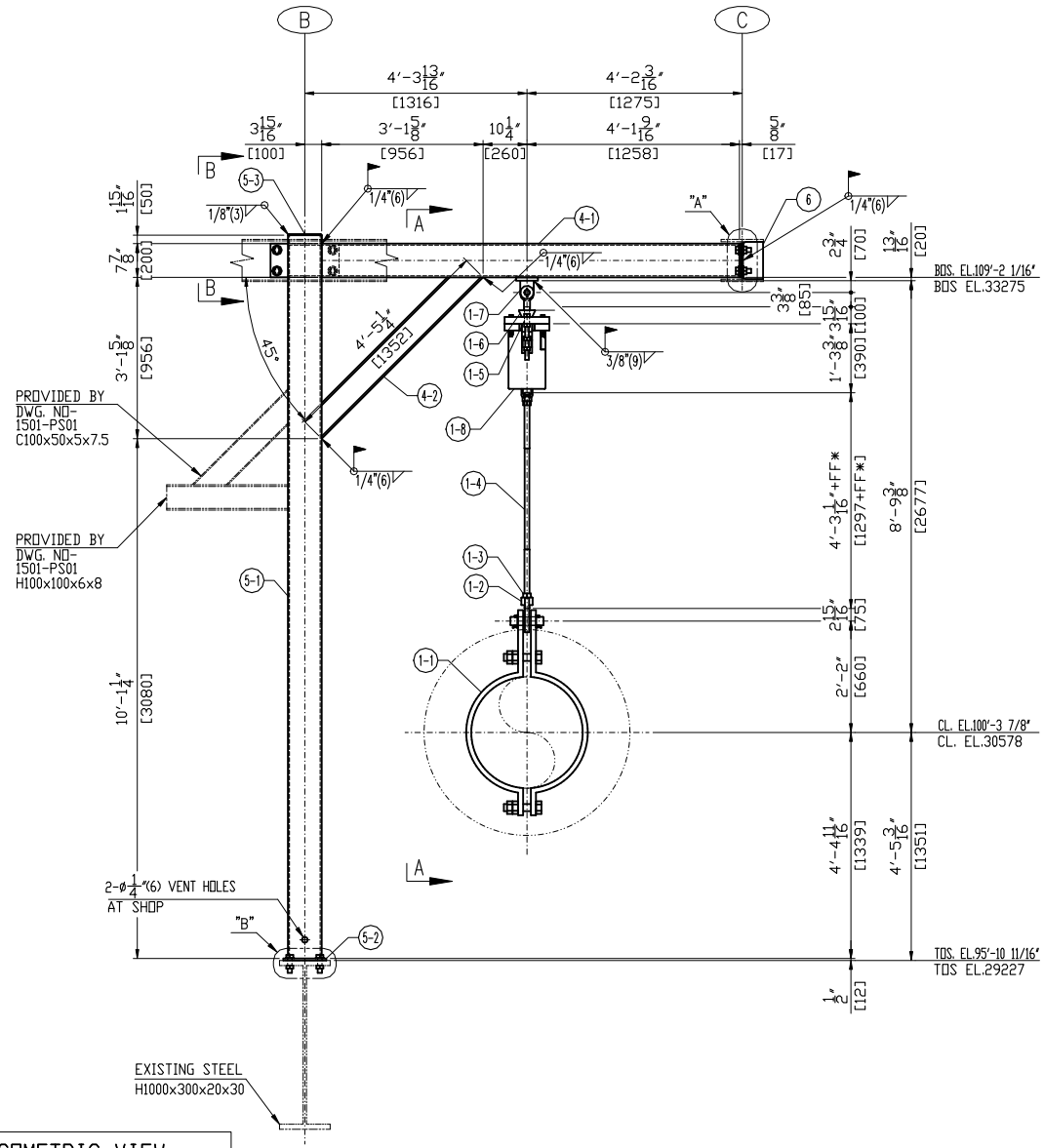

LOOKING NORTH

ISOMETRIC VIEW

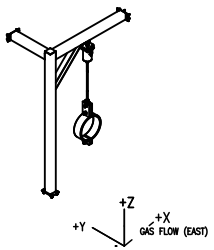

Revision History

Rev	Description	Date	Drawn / Checked By Approved By
–	INITIAL ISSUE	2026-01-21	Drawn J.B.HONG Checked By T.H.KIM Approved By B.L.CHOI

BILL OF MATERIAL — TOTAL WEIGHT : 1584.8 LB — SELECTION NO. 1502 — AREA RIGHT

ITEM	DESCRIPTION	TYPE OR SIZE	LENGTH(mm)	LENGTH(IN)	QTY.	MATERIAL	WEIGHT(LB)/UNIT	WEIGHT(LB)/TOTAL	REMARK
1-1	PIPE CLAMP	PCHDA-650-H-E660			1	A387-22		353.62	NOTE #2
1-2	EYE NUT	EN-M30			1	A668-C		7.28	NOTE #2
1-3	HEX. NUT	HN-M30			2	A563-A	0.44	0.88	NOTE #2
1-4	TIE ROD	TRR-M30	1350	53.15	1	A36		13.99	NOTE #2
1-5	THREADED STUD	THS-M30	100	3.94	1	A36		1.10	NOTE #2
1-6	CLEVIS WITH PIN	CP-M30			1	A668-C		7.50	NOTE #2
1-7	WELD ON EYE PLATE	WP-M30			1	A36		2.20	NOTE #2
1-8	VAR. SPRING HANGER	VH2A-6-M30			1	-		103.62	NOTE #2
2	H.S.B/N/2PW	1"-8 UNC-3 1/2"			4	A325	1.70	6.80	NOTE #3
3	H.S.B/N/2PW	3/4"-10 UNC-2 3/16"			4	A325	0.68	2.72	NOTE #3
4-1	SQUARE TUBE(1-16)	ST200x200x9	2474	97.40	1	A500 Gr.B		285.26	NOTE #3
4-2	H-BEAM	H150x150x7x10	1352	53.23	1	A36		93.89	NOTE #3
4-3	PLATE(4-127-SLOT33-S)	PL12x200x406			1	A36		16.86	NOTE #3
4-4	PLATE	PL20x130x130			1	A36		5.85	NOTE #3

PIPING INFORMATION

PIPE SIZE (IN): 26 — PIPE MATERIAL: A335-P91

ISO NO.: 1502 — OPER. TEMP (F): 1087 — INSULATION (IN): 11

SUPPORT NUMBER	SUPPORT COORDINATES X	Y	Z	DESIGN LOADS (KIPS) X	Y	Z	DESIGN MOVEMENTS (IN) X	Y	Z
1502-PS01	39′-3 13/16″	-10′-11 11/16″	100′-3 7/8″	±0	±0	-40.327	-0.11	-0.97	0.64
	11984	-3345	30578						

"Z" UP — "Y" NORTH — "X" GAS FLOW EAST

NOTES:

1. PIPE SUPPORT SHOP ATTACHMENTS, GENERAL NOTES, WELD & PLATE DETAILS 1635572-D1S0-3800
2. THIS ITEM WILL BE SUPPLIED BY ENGINEERED PIPE SUPPORT SUPPLIER.
3. THIS ITEM WILL BE SUPPLIED BY STEEL SUPPORT FABRICATOR.
4. PIPE ATTACHMENTS THAT ARE SHOP WELDED ONTO THE PIPE ARE SUPPLIED BY THE PIPE FABRICATOR.
5. BILL OF MATERIAL SHOWN ARE FOR ONE (1) SUPPORT, THERE IS ONE (1) SUPPORT PER UNIT
6. REFER TO DRAWING 1635572-D2S0-3801~3804 FOR TYPICAL SHOP WELDED CONNECTION DETAILS NOT SPECIFIED ON THIS DRAWING.
7. FF* : 1 15/16(50)mm FIELD ADJUST
8. THIS ITEM WILL BE SUPPLIED BY CUSTOMER.

HANGER SETTING DATA(EACH)			
SPRING LOAD	5.000 KIPS	TOTAL TRAVEL	3.94 IN
HOT LOAD	4.402 KIPS	THERMAL MOVEMENT	0.64 IN
COLD LOAD	5.375 KIPS	SPRING RATE	1522.3 LB/IN
		VARIABILITY	22 %

UNIT NO.: 11

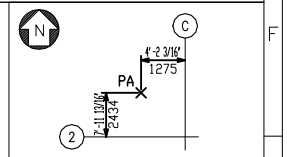

KEY PLAN

Similar To: NONE	Created By: SEONGHWA		MLI No. NONE
First Made For: 1635572	Checked By: VIMAL.V	Approved By: Kim, Chunrae	IEC61355 No. MTC
	Document Type: DETAIL DRAWING		Sheet Size A2
	Document Title: PIPE SUPPORT FOR HRH STEAM OUTLET		
Creation Date 2026-01-21	Drawing No. 1635572-1502-PS01	Revision –	Sheet 1 OF 2

GE VERNOVA

THIRD ANGLE PROJECTION

NLR
Copyright© GE Vernova and/or its affiliates 2026
All rights reserved. The information herein is proprietary information of GE Vernova and/or its affiliates. Thus, it is being provided with the explicit expectation of restricted use. All persons or legal entities receiving this information shall be deemed by the act of its receipt to have contractually agreed to make no duplications, reproductions of any nature by any means, modifications, disclosures, or use use any portion of this material; except as is expressly authorized in writing by GE Vernova and/or its affiliates.

ITEM	DESCRIPTION	TYPE OR SIZE	LENGTH(mm)	LENGTH(IN)	QTY.	MATERIAL	WEIGHT(LB)/UNIT	WEIGHT(LB)/TOTAL	REMARK
5-1	SQUARE TUBE(1-I6)	ST200x200x9	4286	168.74	1	A500 Gr.B		494.18	NOTE #3
5-2	PLATE(4-I27-SLOT33)	PL12x254x356			1	A36		18.78	NOTE #3
5-3	COVER PLATE(4-R14)	PL6x191x191			1	A36		3.79	NOTE #3
6	STIFF. PLATE(R=17)	PL10x119x220			1	A36		4.53	NOTE #3
7	H.S.B/N/2PW	1"-8 UNC-2 3/4"			4	A325	1.54	6.16	NOTE #3
8-1	SQUARE TUBE(1-I6)	ST200x200x9	1205	47.44	1	A500 Gr.B		138.94	NOTE #3
8-2	PLATE(4-I27-SLOT33-S)	PL12x200x406			1	A36		16.86	NOTE #3

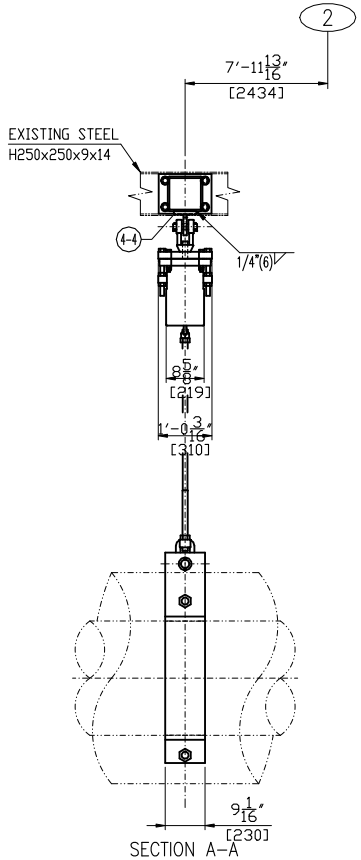

SECTION A-A
LOOKING EAST

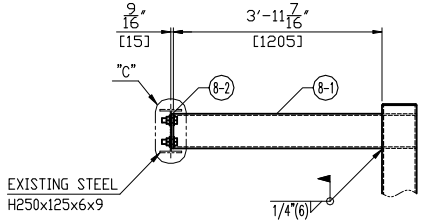

SECTION B-B
LOOKING EAST

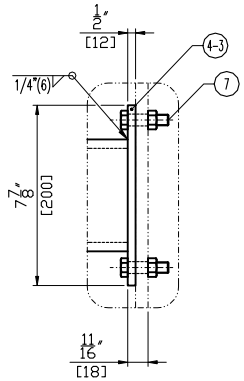

DETAIL "A"

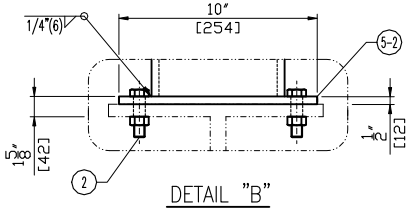

DETAIL "B"

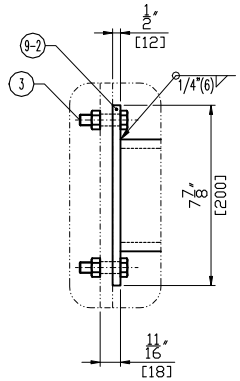

DETAIL "C"

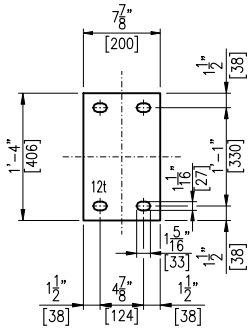

ITEM 4-3 8-2

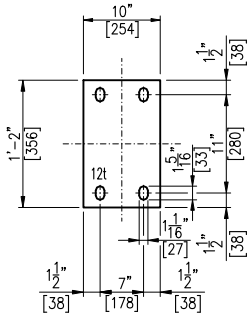

ITEM 5-2

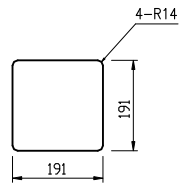

ITEM 5-3

NLR

Copyright © GE Vernova and/or its affiliates 2026
All rights reserved. The information herein is proprietary information of GE Vernova and/or its affiliates.

GE VERNOVA

Document Type: DETAIL DRAWING

Sheet Size: A2

Document Title: PIPE SUPPORT FOR HRH STEAM OUTLET

Creation Date: 2026-01-21

Drawing No.: 1635572-1502-PS01

Revision: –

Sheet: 2 OF 2